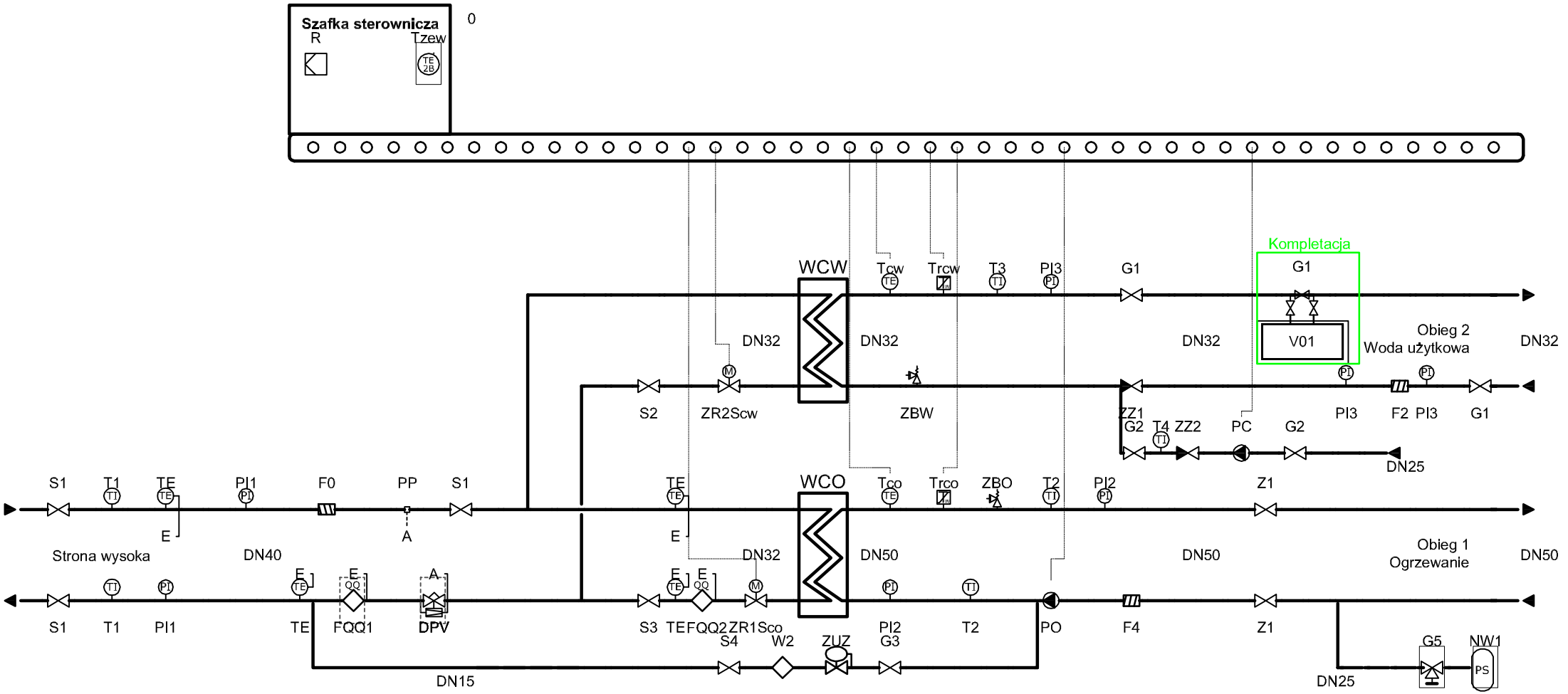

			Projection	Scale	Size A4	Material
						Danfoss Standard 500B0598
-						Designation VXZ9F
Mrk.	Approval/Rev	Date				
Replace						
Design						
Approval			&company_name			86566833-3391-443a-9662-fea
Confidential: Property of Danfoss A/S, Nordborg, Denmark. Not to be handed over to, copied or used by third party. Two- or three dimensional reproduction of contents to be authorized by Danfoss A/S.						No.
						Sheet 1:1